The pneumatic fuel pump (12) and the lever (8) for actuating the decompression valves are mounted on this likewise. The engine mount carrier is supported on two CRP-swords. An electric spindle (21) moves the whole unit out of the engine bay. Nearby a gas spring (17) takes most of the weight. A limit switch (20) confirms the extended state of the power-plant. In the extended state, a toggle strut (22) holds up the engine installation and supports itself on the cross tube between the lift pins. The strut is just racked in the extended state.

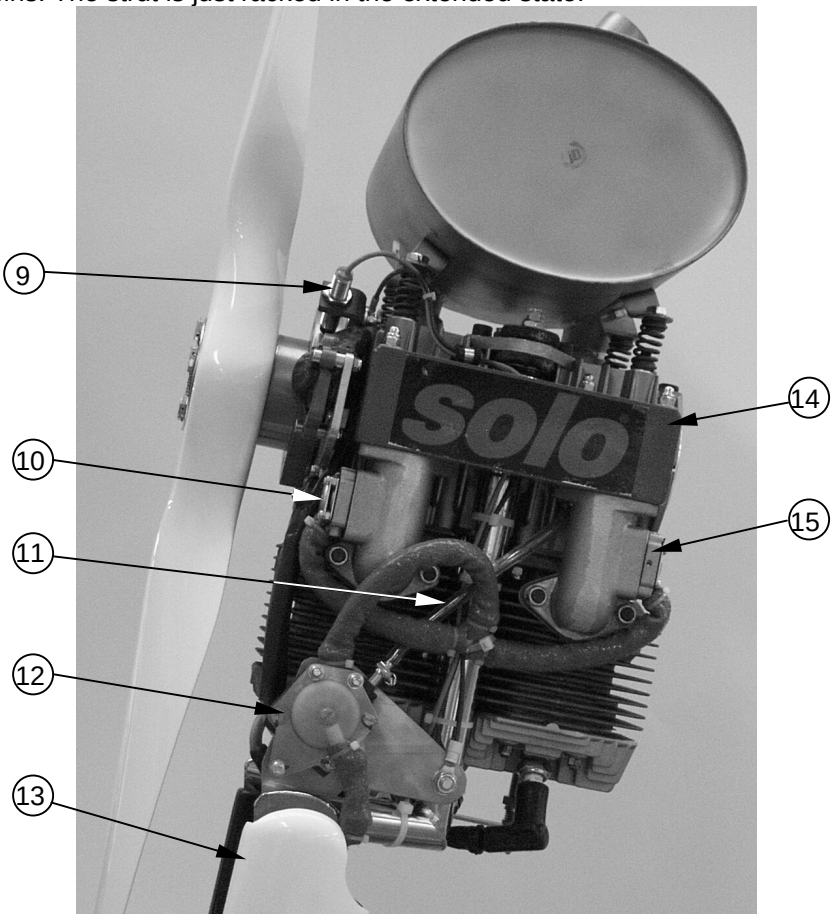

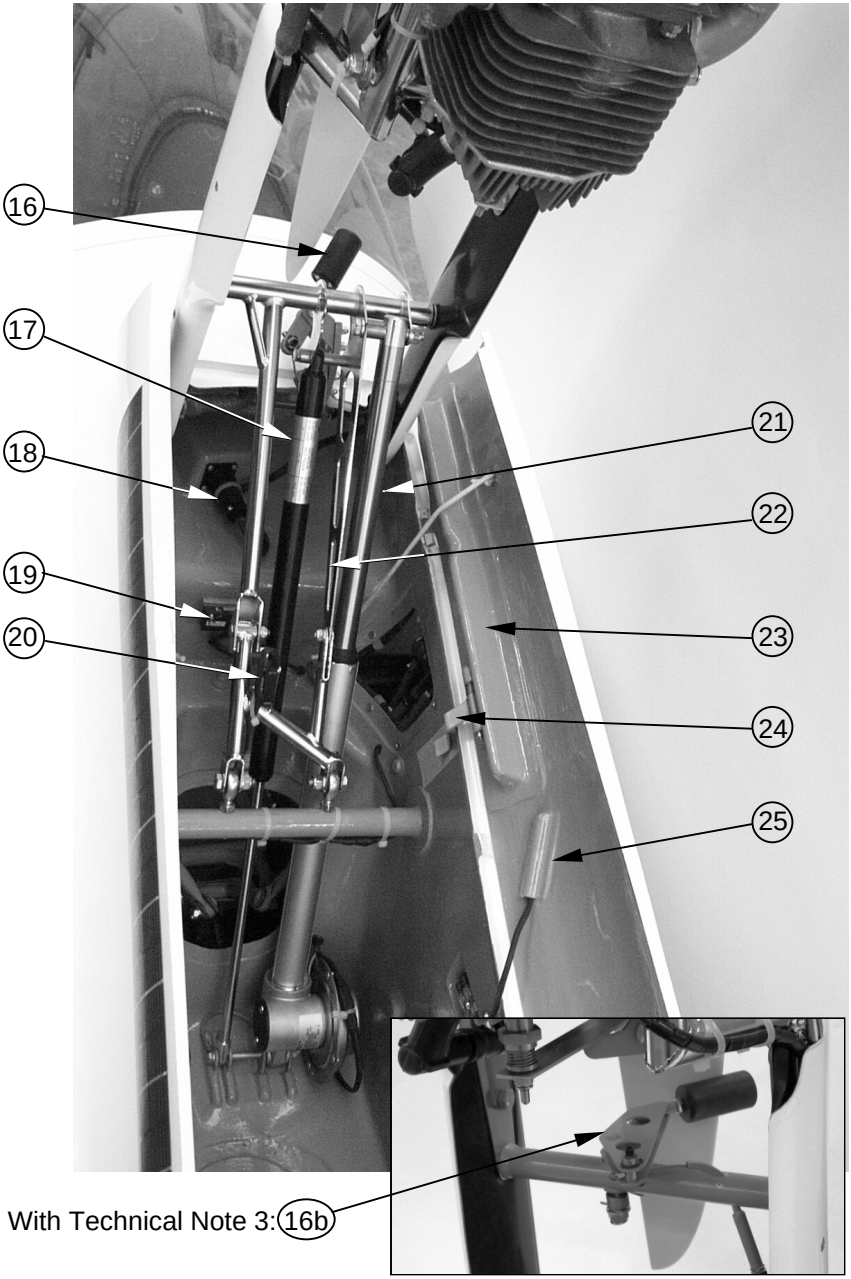

With Technical Note 3: 16b

The bowden cable for the decompression valves (4) and the wires for ignition and rev measurement lay under the right-hand FRP-fairing (5). The fuel pipe is hidden under the left-hand FRP-fairing (13). During extension of the engine, the FRP-fairings push the bay doors open, first via two spring loaded clamps (24), than through a separator (23). Rubber chords pull the flaps close again.

The propeller stopper (16) is located between both CRP-swords. It is also operated through a bowden cable. For propellers with a diameter of less than 1.2m, propeller stopper (16b) is necessary.

The limit switch (19) for the retracted state is located on the vertical wall of the engine bay.

Engine Operating Element in Cockpit

The main switch (26) for the engine electric circuit, the power-plant instrument (27) and a mirror (28) is located in the instrument panel. Left-hand next to the seat pan is the control console with the power-plant lever (29) and the fuel cock (30).

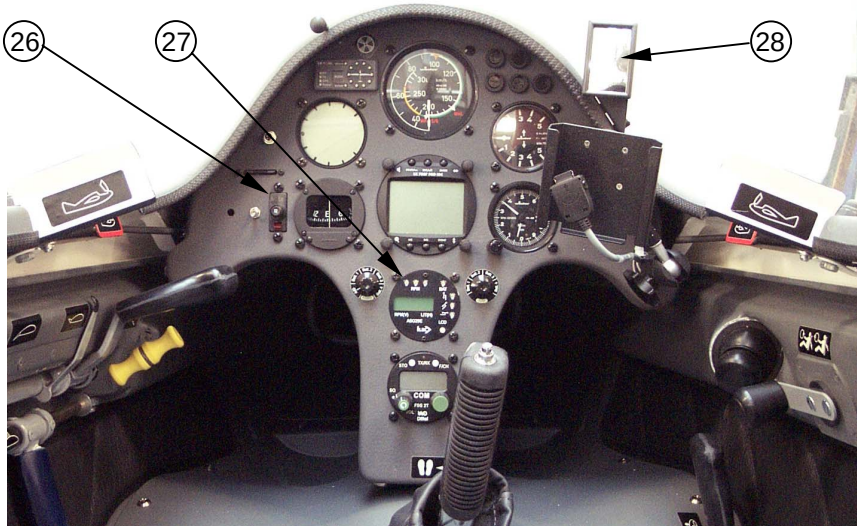

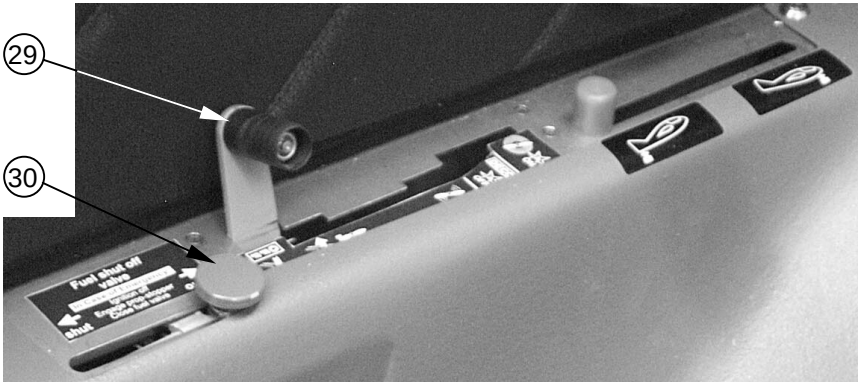

Fuel System and Tank

The fuel tank (32) is mounted behind the headrest. On ground, the fluid level in the tank can be controlled through a transparent stripe in the tank (34), provided that the wings are levelled. Due to the glue joint of the tank, fuel levels below 6 Ltrs cannot be discerned reliably. The tank can easily be removed by pulling the two locking pins (31, 36). The electric connection of the capacitive fuel sensor (33) and the grounding are automatically connected and disconnected. The fuel and ventilation (35) lines are long enough, that they need not be disconnected, when only the area behind the tank has to be accessed. The tank can be put on the seat-pan or be hooked into the canopy frame. When the fuel and ventilation lines are connected or split, the disconnection plugs (39) can be hold out of the cockpit, to prevent spillage of fuel into the glider. The plugs on both sides are self-sealing. The visible section of the fuel line also encloses a fuel filter (37).

There are a sediment bowl, an electric fuel pump (38) and the fuel cock under a cover behind the backrest on the left hand side of the fuselage. From the sediment bowl a hose leads to the drainer located under the left landing gear door in front of the main wheel. This is also the location of the ventilation port of the fuel tank.

Fig. 2.13.1-1 Fuel System

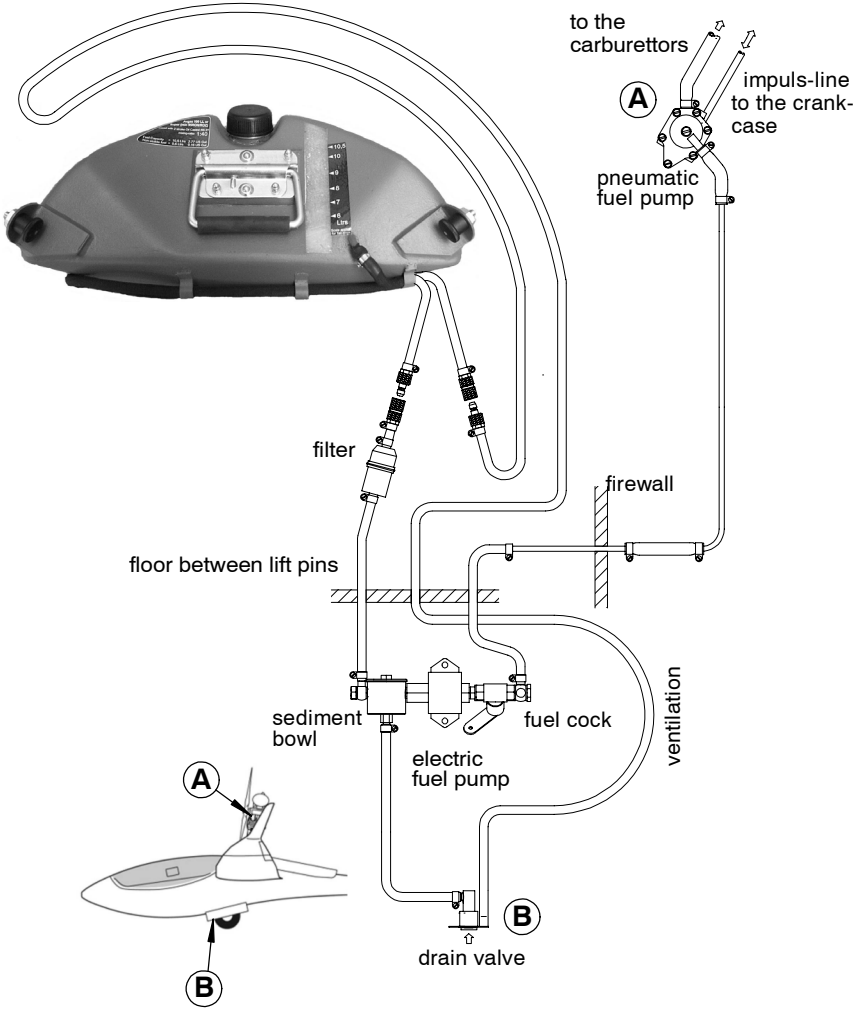

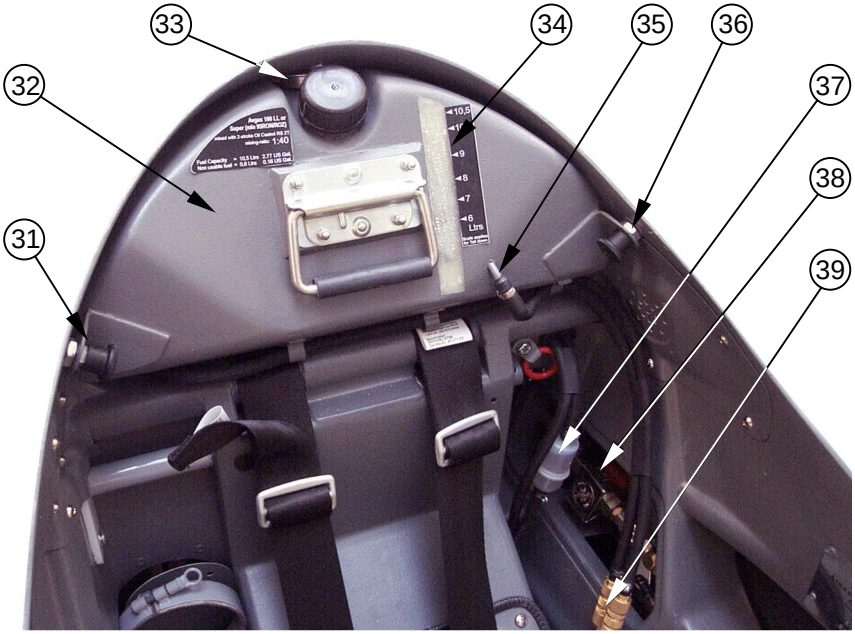

Ignition

The engine incorporates a magnetic ignition system. The pole wheel is located behind the propeller hub and not only drives both ignition coils (6), but also the speed sensor (9).

Exhaust System

The stainless steel silencer (1) is mounted with four spiral springs on the crankcase. It is joined to each manifold through a flexible tube and a sliding connection.

Control Unit

The control unit is hidden behind a cover at the left-hand side of the engine bay. According to the position of the power-plant lever the retracting and extending switch, the ignition switch, the bowden cable of the propeller stopper and the decompression valves will be operated.

Electric System of the Power-plant

The cable harness connects the power-plant instrument in the instrument panel, the relays in the control column frame under the seat pan, the control unit and various consumers and sensors. The spindle and the electric fuel pump are controlled by the relays. The speed sensor on the engine, the fuel level sensor in the fuselage tank, the switches on the power-plant and at the control unit act as sensors.
An ignition line connects the power-plant instrument with the control unit and the ignition coils.

The wires leading to the engine can be disconnected with a plug (18), which is located between the pivots of the engine suspension.

empty page

connected and the power-plant instrument is switched on). Thereby, a slit of about 6 mm (1/4 in.) between speed sensor and magnetized pole results. Secure the nut of the speed sensor with Loctite 242. The installation of the exhaust has to be checked by an inspector.

Minimum material necessary for re-assembly:

1 Thermag-nuts SW9 M6 SSN 441
2 Thermag-nuts SW12 M8 SSN 441
1 self-locking nut M5
1 self-locking nut M8
Loctite 242
Hose clips, cable-fixer

2.13.3 Temporarily shut down of the Power-plant

If an engine is not going to be operated for longer than two months, it has to be preserved according to the Engine Manual:

Drain the fuel system. Inject about 5 cm³ (0.3cu.in.) two-stroke oil through the intake system into both intake ports. With the ignition turned off, and open decompression valve, turn with the propeller about 10 revolutions.

Lock the entrance opening at the air intake and the exhaust opening.

2.13.4 Power-plant Dismantling & Re-Assembling

To simplify the work, the rubber chords of engine bay doors can be disconnected, or the doors can be held open a strut.

Extract the power-plant just short before its fully extended position.

IMPORTANT NOTE: *Turn off the main switch.*

Detach the fairing of the right sword with the two cross recess screws and take it away sideways and rearwards. Unhook the clevis at the decompression lever and unscrew it from the bowden cable, as well remove the counter nut and spiral spring.

Screw off the carrier of the swivelling part of the propeller stopper, and leave the unit in the plane. If otherwise the stucking of the Bowden cable is opened, a new traction must be applied when reinstalling the engine.

The electric plug-in connector (18) has a bayonet coupling.

IMPORTANT NOTE: *If connector (18) is pulled, the ignition is definitively on! Therefore, also pull the spark plug caps!*

Pinch off the fuel line at the lower end of the left-hand sword, and close both ends, so no dirt can penetrate. Screw off the end switch (20) at the toggle strut and open the cable fixer at the strut.

Open the shrink hose covering the electric lines of the spindle and disconnect the terminals. Screw off the spindle at both ends and take it out.

IMPORTANT NOTE: *If the gas spring is intact, the power-plant will stay unsupported in its extended position. If, however, the toggle strut is pushed in, the power-plant will flip in violently. Therefore, an assistant should secure the toggle strut and the engine.*

Screw off the toggle strut from the swivel heads at the cross tube between the lift pins.

IMPORTANT NOTE: *When the screws are pulled out of the swivel heads, the strut immediately wants to kick upwards under the force of the gas spring.*

Carefully release the strut upwards by hand, until the gas spring arrives at its stop. Support the engine and screw off the gas spring.

Lower the power-plant carefully into the engine box, folding and placing the toggle strut the way it usually does. The fitting around which the power plant pivots is attached with the four screws to the engine bay. These four screws also secure the axles of the hinge. Loosen the screws and pull the axles. Then, the whole power-plant can be taken out, but solicitously take care to move the bowden cable of the decompression through the hole in the sword.

The mounting follows in reverse order. When reconnecting the decompression lever, take care that in rest position it just does not touch the sheet metal between the decompression valves. With the propeller stopper variant mounted atop the CRP swords (16b), Loctite 242 is needed for the screws that go into the propeller stopper carrier. The screws of the sword fairing are secured with Loctite 222. Take care not to squeeze the cables under the fairing. The installation of the power-plant has to be checked by an inspector!

Minimum material necessary for re-assembly:

2 self-locking nuts M3
2 self-locking nuts M6
4 self-locking nuts M8
Loctite 222 (if applicable 242)
hose clips, cable-fixer

2.13.5 Operation with Removed Power-plant

Operation with removed power-plant is possible. All loose parts (bowden cable, end switch, propeller stopper...) must be safely tied up.

A C.G. calculation or better weighing must be done for operation with removed power-plant. Lever arms can be found in chapter 6.8. The permissible C.G. range or the mass limits do not change

Power-Plant:

The points marked below must be greased or oiled in the course of each annual C. of A. inspection.

Fig. 8.0-2 Lubrication Scheme Engine Compartment