ALEXANDER SCHLEICHER KG Segelflugzeugbau Poppenhausen/Wasserk.	Technical Note Glider Ka 6 E L - 205	No. 17 LTA Nr. 68/109

Subject: Suspension of the thermosbottles beow the baggage compartment.

Effectivity: All serial numbers up to No. 4232 incl., except No. 4226.

Effect on:	Airworthiness:	Weight:	Balance:
	yes.	no.	no.

Reason: There is the suspicion, that a bottle got loose and blocked the controls.

Instructions: Remove the bottles and cut off the existing screws. Place new clamps over the bottle and install rubber ring in between. Adjust correct distance of the clamps (see sketch). Drill holes for the attaching screws in the plywood bottom floor from the inside of luggage compartment. Any existing equipment should be removed before.
Install bottles using 15 mm Ø washers on each side of floor bottom. Reconnect the bottles in the correct sense to instrument lines.

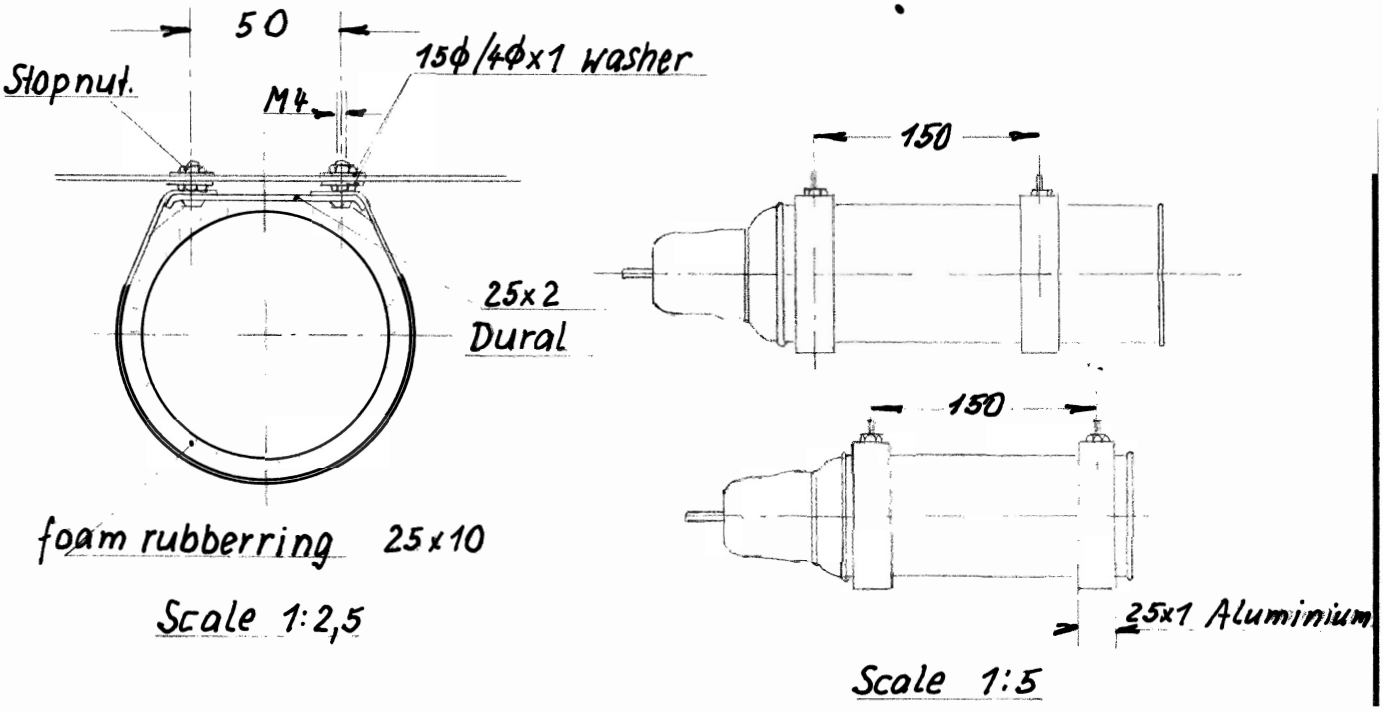

Materials required: The parts are supplied by the Fa. Schleicher.

Accomplishment: Check old suspension for proper fastening. In case any movement or loose conneetion may be found, this modification should be incorporated immediately. In the other case not later than 1.3.1969.

Alexander Schleicher KG, Segelflugzeugbau
6416 Poppenhausen/Wasserkuppe, den 10.9.1968

LBA-approved
German original
signed: Friess
13.9.1968