ALEXANDER SCHLEICHER KG Segelflugzeugbau Poppenhausen/Wasserkuppe	Technical Note Powered glider ASK 14 L - 684	No. 1

Subject: Suspension of the thermosbottles below the baggage compartment.

Effectivity: All serial numbers up to 14004.

Effect on:	Airworthiness:	Weight:	Belance:
	jes.	no.	no.

Reason: There is the suspection, that a bottle got loose and blocked the controls.

Instructions: Remove the bottle and cut off the present screws. Put the new suspension bands over the bottle and push the rubber ring between. Bring the bands to the correct distance, see sketch. Thrill the holes in the plywood from above, so that the bottles come at their old place. If there is any equipment it should be removed for that work. Install the bottles. There must be a 15 mm dia. washer at both sides of the plywood. Connect the bottles in the correct sense to the instrument lines.

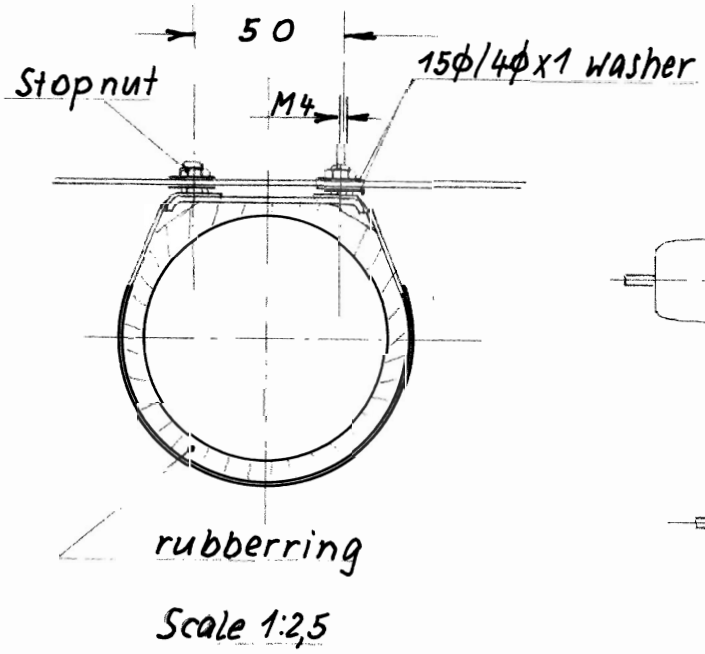

Scale 1:2,5

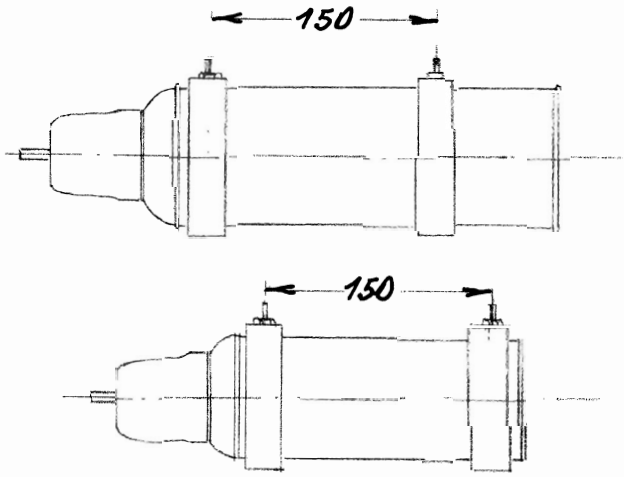

Scale 1:5

Materials required: The parts are supplied by the Fa. Schleicher.

Accomplishment: Check the old suspension for intact connection. If there is no satisfying result, the modification has to be made immediately, in the other case until 1.3.1969.

Alexander Schleicher KG, Segelflugzeugbau
6416 Poppenhausen/Wasserkuppe, den 10.9.1968

LBA approved:
German original
signed: F r i e s s
24.10.1968