ASH 30 Mi
Maintenance Instruction A
Issue 1

Alexander Schleicher
GmbH & Co.
Segelflugzeugbau
D - 36163 Poppenhausen

Subject: **Replacing the elastic fairing tapes at the control surface gaps and at the gaps of the engine compartment doors.**

Replacing the turbulators on winglets, wingtips, horizontal and vertical tail.

Affected: ASH 30 Mi

Reason: The gaps at the control surfaces of the ASH 30 Mi are covered as standard with elastic fairing tapes. At the ailerons and centre section flaps, the flaps and the elevator, the gaps are also sealed in addition by means of a Teflon sealing/slip tape on the side of the hinges. Elastic fairing tapes are also installed on the vertical fin, the engine compartment doors and the main wheel doors.

For the removal of control surfaces on the wing and on the horizontal tail - e.g. for any maintenance or repair work - it is necessary to remove the relevant elastic fairing tape and the Teflon sealing/slip tape on the control surface hinges side.

Turbulator tapes (zig-zag) are affixed on the winglets, the wing-winglet-junction, the wingtip, the vertical and horizontal stabilizer, as well as on the NACA inlets and the actuators of the control surfaces of the wing. Damage or deformation (protruding or compressed jags at the front edge) can make replacing necessary.

Action: If the elastic fairing tape needs to be removed only for maintenance or repair of the control surfaces, please observe the following:

For the purpose of disassembly of aileron, centre section flap and flap:
The elastic fairing tape and the Teflon sealing/slip tape need to be removed only on the lower side (where the control surface hinges are located).

For the purpose of disassembly of elevator:
The elastic fairing tape and the Teflon sealing/slip tape need to be removed only on the upper side (where the control surface hinges are located).

Disassembly of the rudder, the engine compartment doors and the main wheel doors:
It is not necessary to remove the elastic fairing tape!

1. Carefully remove the old elastic fairing tape in order to avoid any delaminations of the layers in this area. Remove any adhesive residue from the recessed step by means of synthetic resin thinners. With careful handling a Rubber Eraser Pad can be very helpful.

2. Accomplish any required inspection, maintenance or repair work at the control surfaces themselves and / or their hinges.

3. Cut the new elastic fairing tape and the Teflon sealing/slip tape into appropriate lengths (refer to the table under point "Material").

Note: All surfaces must be completely clean, dry and free from dust and grease!

For cleaning of the glue areas Acetone (min. 99%) proved to be best.

Wing lower side and horizontal tail upper side:

See Fig. 1 and 2

Apply the Teflon sealing/slip tape [1] with a clearance of 13 mm / 0.51” (wing) resp. 16 mm / 0.63” (horizontal tail) to the front edge of the recessed step. Ensure that the Teflon sealing/slip tape lies slack over the gap and that flap and aileron are set to maximum negative deflection, elevator to maximum positive deflection. During normal full control deflections the Teflon sealing/slip tape must not be stretched, so that that full deflections would be hindered.

Apply full deflections several times so that the Teflon sealing/slip tape [1] fits well into the gap; it must be firmly rubbed down on to the surface!

Remove the protective backing from the elastic fairing tape and firmly stick it into the recessed step of the wing lower side resp. horizontal stabilizer upper side, leaving no gap at the front edge. Use elastic fairing tape 38/12 [2] for the wing and the elastic fairing tape 38/15 [3] for the horizontal stabilizer upper side. The elastic fairing tapes are scarfed on their trailing edge.

Finally, press the adhesive zones of the elastic fairing tape [2/3] firmly down on the surface by means of a soft wooden block (e.g: Balsa) or a hard rubber roller!

For the **horizontal tail** in addition, a protective adhesive tape [6] (e.g. Tesa film No. 4104, white, 38 mm / 1.5” wide) is applied over the joint of the front edge of the elastic fairing tape [3] and the step in the stabilizer (*see Fig. 2*). This tape should be as thin and moisture proof as possible. This protective tape serves to prevent the detachment of the front edge of the elastic fairing tape which might result in dangerous flight characteristics.

Fig. 1
Wing,
lower side

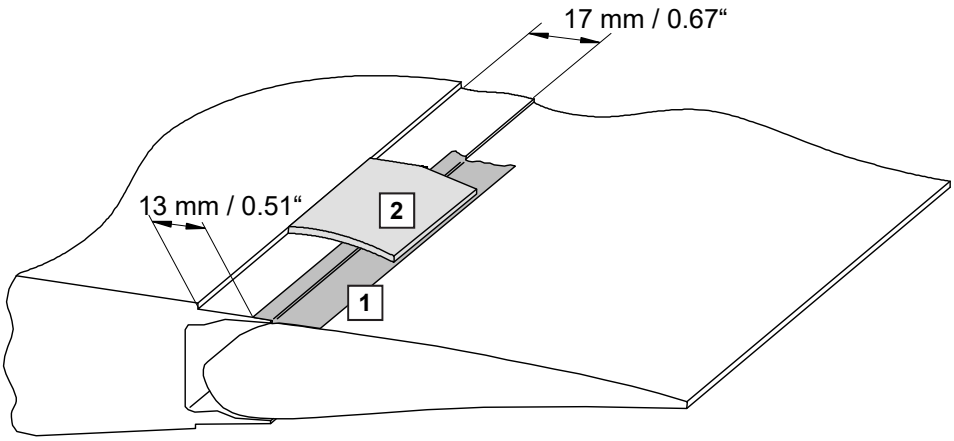

Fig. 2
Horizontal tail,
upper side

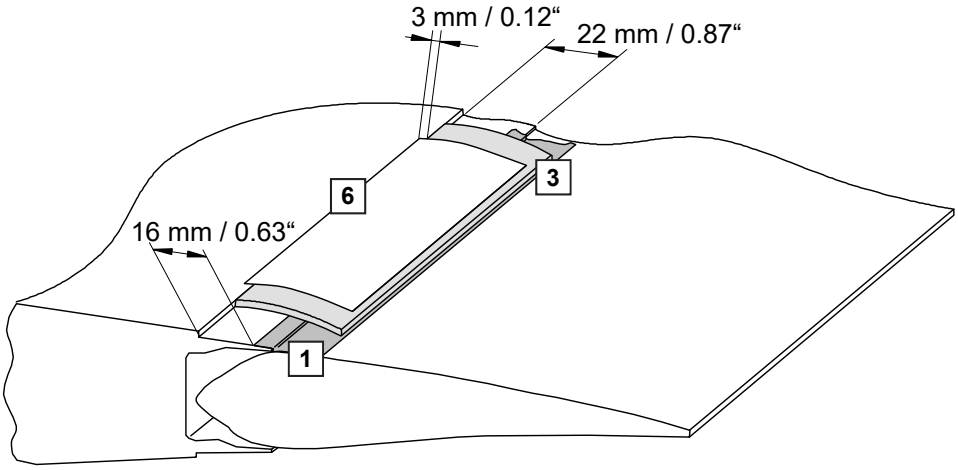

Wing upper side and horizontal tail lower side:

Remove the protective backing from the elastic fairing tape and firmly stick it into the recessed step of the wing upper side resp. stabilizer lower side, leaving no gap at the front edge. For the wing upper side use elastic fairing tape 38/15 [3] (inner wing) and elastic fairing tape 38/12 [2] (outer wing). For the horizontal tail lower side use elastic fairing tape 30/15 [4]. The elastic fairing tapes are scarfed on their trailing edges.

Finally, press the adhesive zones of the elastic fairing tape [2/3/4] firmly down on the surface by means of a soft wooden block (e.g: Balsa) or a hard rubber roller!

Only for the **horizontal tail** in addition, a protective adhesive tape [7] (e.g. Tesa film No. 4104, white, 25 mm wide) is applied over the joint of the front edge of the elastic fairing tape [4] and the recessed step in the stabilizer (*see Fig. 3*).

Fig. 3

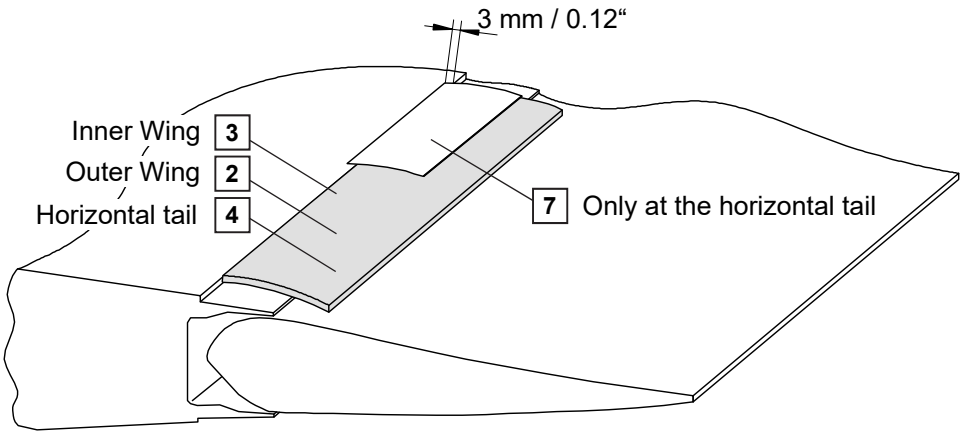

At the junction between the centre section flap to the aileron resp. flap, the elastic fairing tape must be cut in up to the wing *(Fig. 4)*.

Fig. 4

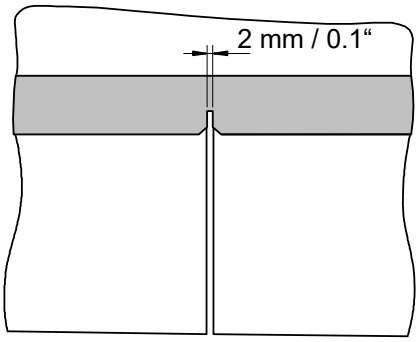

Vertical tail:

There are no recessed steps on the fin. On both sides the elastic fairing tape 30/12 [5] is affixed and pressed firmly down. A protective adhesive tape [7] (e.g. Tesa film No. 4104, white, 25 mm wide) is applied over the joint of the front edge of the elastic fairing tape to protect peeling. The zig-zag-tape [10] is affixed with its rear edge with a distance of 5 mm / 0.2” to the protective adhesive tape (30 mm / 1.2” distance to the rear edge of the fin). S*ee Fig. 5.*

Fig. 5

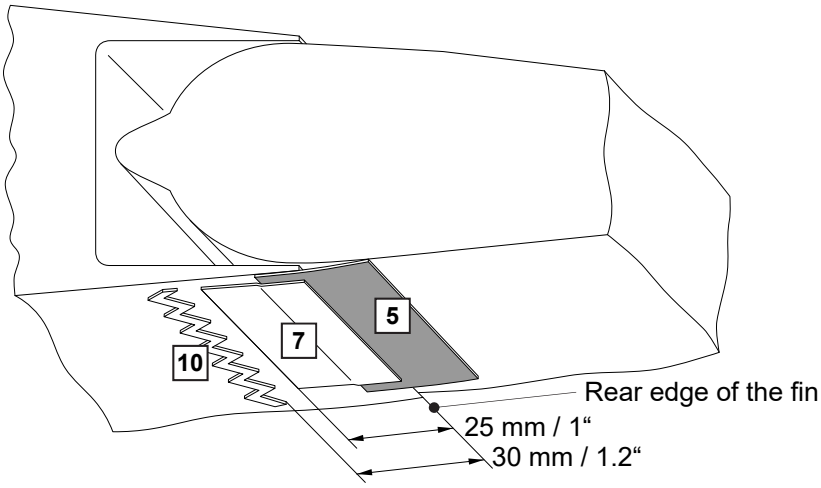

Material:

		Inner wing		Outer wing		Horizontal tail		Vertical tail
	Side	upper	lower	upper	lower	upper	lower	both
[1]	Teflon sealing/slip tape, 30 mm / 1.2” wide		2 x 6.2 m 20.3 ft		2 x 6.9 m 22.6 ft	1 x 3.1 m 10.2 ft		
[2]	Elastic fairing tape 38/12 * convex, scarfed		2 x 6.2 m 20.3 ft	2 x 6.9 m 22.6 ft	2 x 6.9 m 22.6 ft			
[3]	Elastic fairing tape 38/15 * convex, scarfed	2 x 6.2 m 20.3 ft				1 x 3.1 m 10.2 ft		
[4]	Elastic fairing tape 30/15 * convex, scarfed						2 x 1.5 m 4.9 ft	
[5]	Elastic fairing tape 30/12 * convex, scarfed							2 x 1.6 m 5.2 ft
[6]	Protective adhesive tape, Tesafilm No. 4104, white, 38 mm / 1.5“					1 x 3.2 m 10.5 ft		
[7]	Protective adhesive tape, Tesafilm No. 4104, white, 25 mm / 1“						2 x 1.6 m 5.2 ft	

* The elastic fairing tapes are described with their width and the width of the adhesive film attached to it (e.g. 38 mm / 15 mm). **But it is also possible that the elastic fairing tape and the adhesive film are delivered as separate items.**

Engine compartment doors and main wheel doors

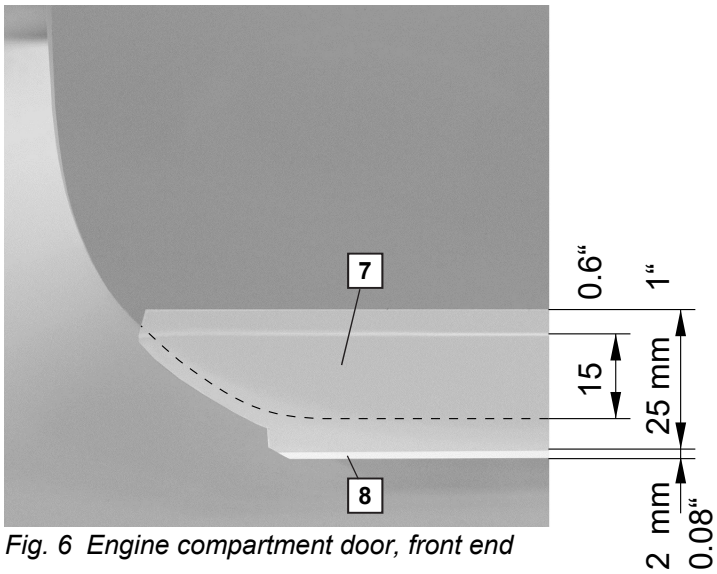

Fig. 6 Engine compartment door, front end

Fig. 7 Engine compartment door, rear end

The elastic fairing tape 22/15 [8] is affixed along the lower edge of the engine compartment door with an overhang of 7 mm / 0.3” (only the 15 mm / 0.6” wide adhesive film of the elastic fairing tape is on the engine compartment door). The protective adhesive tape [7] is positioned 2 mm / 0.08” backwards to the edge of the elastic fairing tape. The ends of the elastic fairing tapes will be cut as shown in Fig. 6 and 7. If no engine is installed, the elastic fairing tapes can be omitted. The gaps are sealed with a flexible plastic tape.

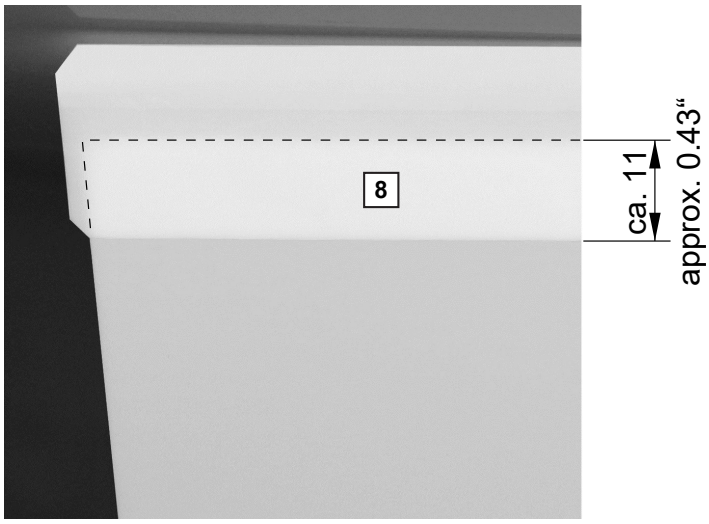

Fig. 8 Main wheel door, front end

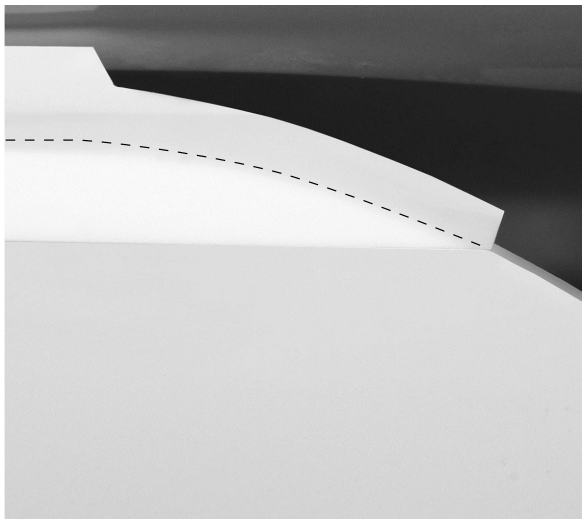

Fig. 9 Main wheel door, rear end

The elastic fairing tape 22/15 [8] is affixed along the upper edge of the main wheel door. The dimension 11 mm / 0.43” can vary, so that the gap is completely covered. The ends of the elastic fairing tapes will be cut as shown in Fig. 8 and 9.

Material:

		Engine comp. doors	Main wheel doors	
[7]	Protective adhesive tape, Tesafilm No. 4104, white, 25 mm / 1“	2 x 1.9 m / 6.2 ft	- -	* The elastic fairing tapes are described with their width and the width of the adhesive film attached to it (e.g. 22 mm / 15 mm.
[8]	Elastic fairing tape 22/15 * convex	2 x 1.9 m / 6.2 ft	2 x 0.9 m / 3 ft	

Turbulator tape (zig-zag) on winglets, wingtips and horizontal tail

Winglet

Zig-zag-tape only on the inside

The dimensions refer to the centre line of the zig-zag-tape

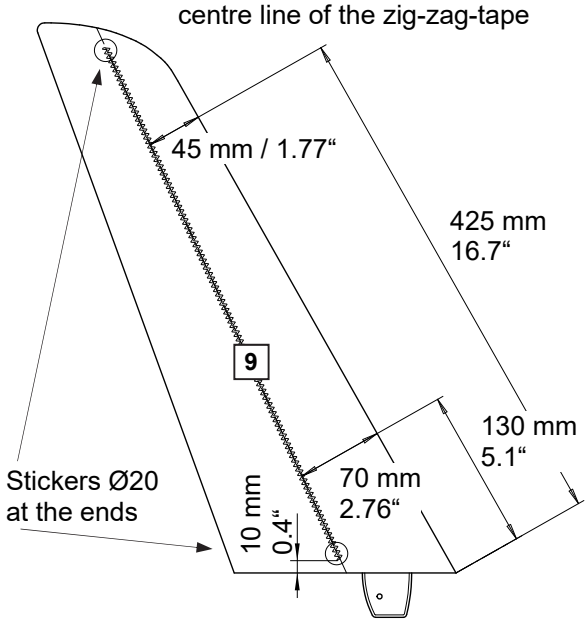

Zig-zag-tape [9] is affixed as a continuation of the winglet’s zig-zag-tape

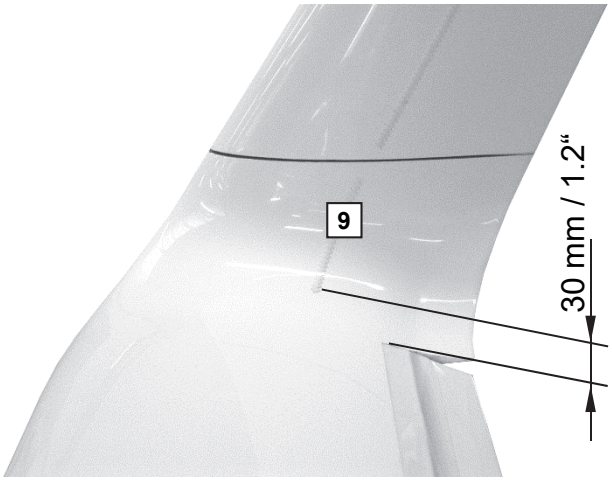

Wingtip (lower side)

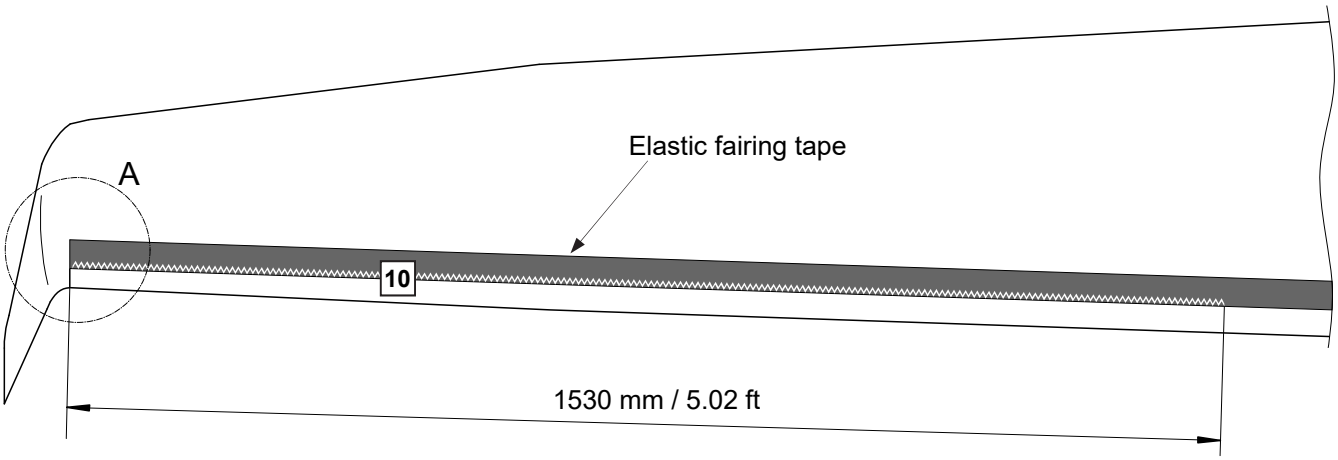

Zig-zag-tape is affixed onto the elastic fairing tape (flush with the rear edge) over a length of 1530 mm / 5.02 ft from the outer end of the aileron.

Detail A:

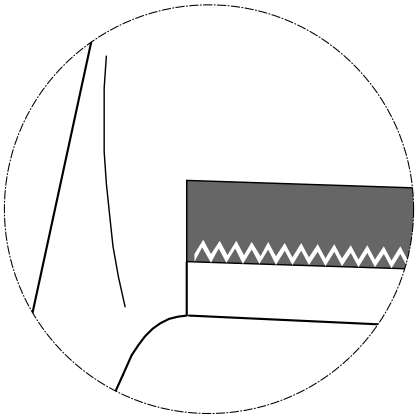

Horizontal tail

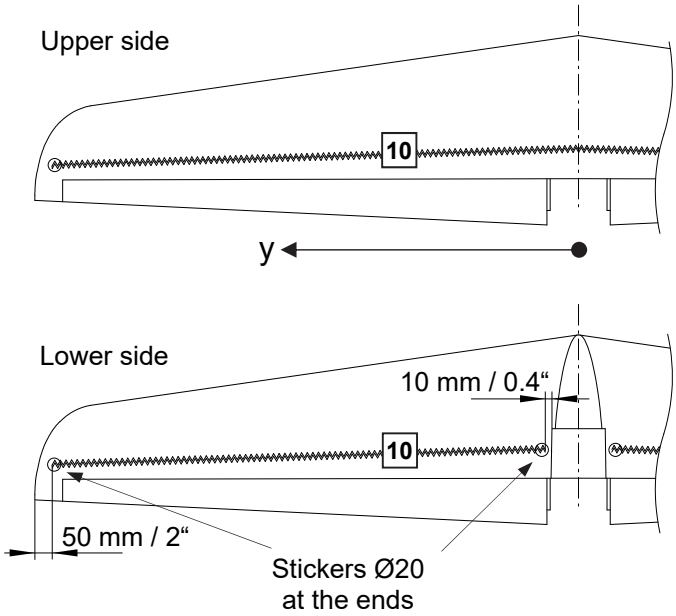

Distance to the centre of the horizontal tail y [mm / inch]	Distance to the rear edge of the zig-zag-tape	
	from the leading edge of the horizontal stabilizer	from the trailing edge of the horizontal stabilizer
0	337 mm 13.27“	- -
100 mm 3.94“	325 mm 12.8“	206 mm 8.1“
1405 mm 55.3“	177 mm 6.97“	103 mm 4.06“

Material:

		Horizontal tail	Winglet and winglet transition section	Wingtip (lower side)	Horizontal tail
[9]	Zig-zag-tape 60° 3.5 mm distance between tips 0.5 mm thickness	- -	2 x 0.6 m 2.0 ft	- -	- -
[10]	Zig-zag-tape 60° 7 mm distance between tips 0.5 mm thickness	2 x 1.6 m 5.2 ft	- -	2 x 1.53 m 5.02 ft	oben: 1 x 3.1 m unten: 2 x 1.6 m up: 1 x 10.2 ft below: 2 x 5.25 ft

Particularities and details on the wing

In front of the NACA inlets in the control surfaces, two zig-zag-tapes [10] (any with 4 spikes), one stuck to the other, are affixed to the leading edge of the elastic fairing tape.

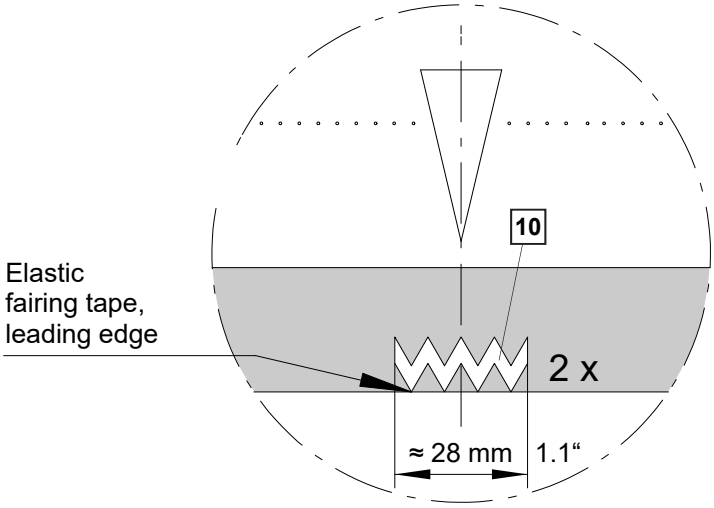

Zig-zag-tape [10] (100 mm / 4” wide) is affixed to the actuators of the ailerons, centre section flaps and the flaps. The trailing edge of the zig-zag-tape is flush with the blow holes.

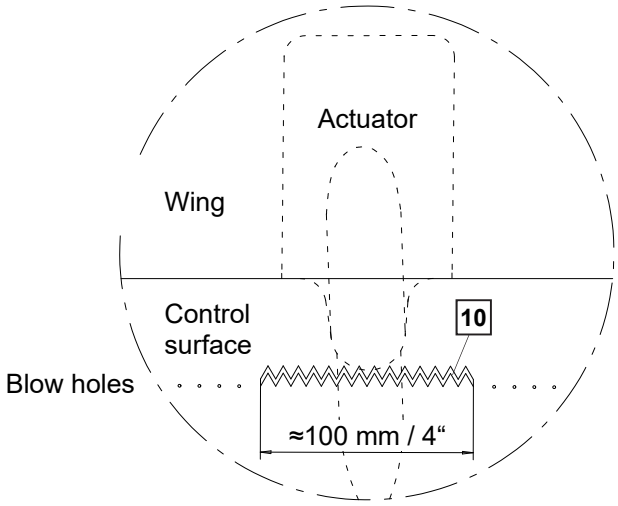

The material can be ordered from Alexander Schleicher:
Phone ++49 (0) 6658-890 Fax: ++49 (0) 6658-8940 E-mail: info@alexander-schleicher.de

Poppenhausen, den 18.12.2015

Alexander Schleicher
GmbH & Co.

By order (M. Münch)