Issue date: 21.10.2026

Subject: Alternative rim for main wheel
The rim Tost Penta 125 – 1¼“ can be installed instead of the series standard Cleveland rim.

Applicability: ASK 21, all serial numbers

Urgency: optional

Material:

(1) 51-000-0069-00 Disc brake wheel TOST 5'' SBP Penta 125-77,5-1 1-4'' including brake disc
50-000-3634-00 Tube 5 00-5 short valve TR 87 90°

Alternatively, the complete wheel with rim, tube, and tire:
99-000-7324-00 Disc brake wheel TOST 5'' Penta 125-77,5-1 1-4'' 15x6 00-5 6PR

(2) 210-21-0027-00 Spacer for wheel axle (ASK 21 ÄM3) - L=37 (installed on the left)
(3) 210-21-0027-01 Spacer for wheel axle (ASK 21 ÄM3) - L=31 (installed on the right)
(4) 210-21-0028-00 Clamping washer for wheel axle (ASK 21 ÄM3) - Ø35/10-2
Maintenance instruction “Rim Tost Penta”

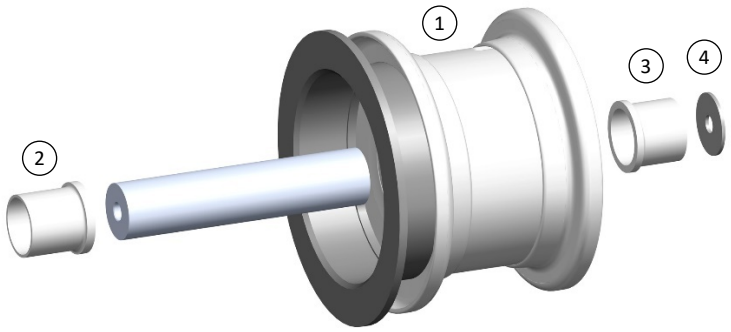

Mass and Balance: This change has to be regarded by weighing or calculation. The mass and balance form in the manual and the placards in the cockpit have to be updated.

The Tost rim and its associated parts are approximately 250 g lighter than the parts of the Cleveland wheel.

Notes: This change has to be considered as a non-complex maintenance task regarding aviation law. The respective regulations must be applied.

Approval: This Technical Note bases on a change, which was approved by EASA under the minor change approval 10031466.

Actions

When replacing the Cleveland rim with the Tost Penta 125 – 1¼“ rim, the spacer bushings on the left and right sides of the rim, as well as the clamping washer, must be replaced with the new parts (2) through (4). In addition, a tube with a short valve must be used for the Tost rim. The brake caliper is retained.

The following maintenance instruction is attached to the maintenance manual.
“Rim Tost Penta”, Doc. No. 210-99-0010-01, Issue 02